REAR (power input)

netgate 5200

Set printer scaling to 100% & print this page
on 8.5 x 17 paper.

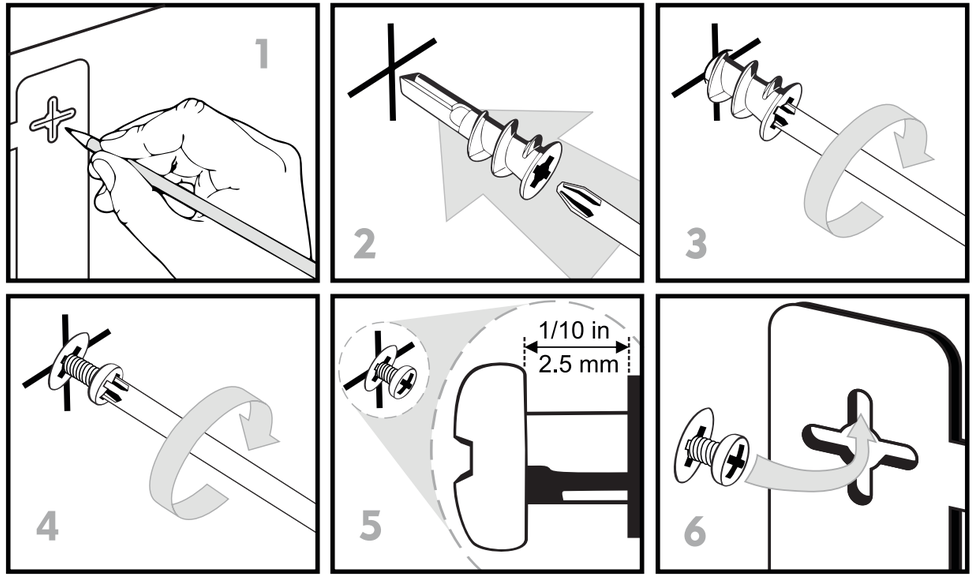

3.43 inches
87 mm

9.5 inches
241.25 mm

FRONT (i/o ports)

netgate 5200

Set printer scaling to 100%
print pages A & B on 8.5 x 11” paper

REAR (power input)

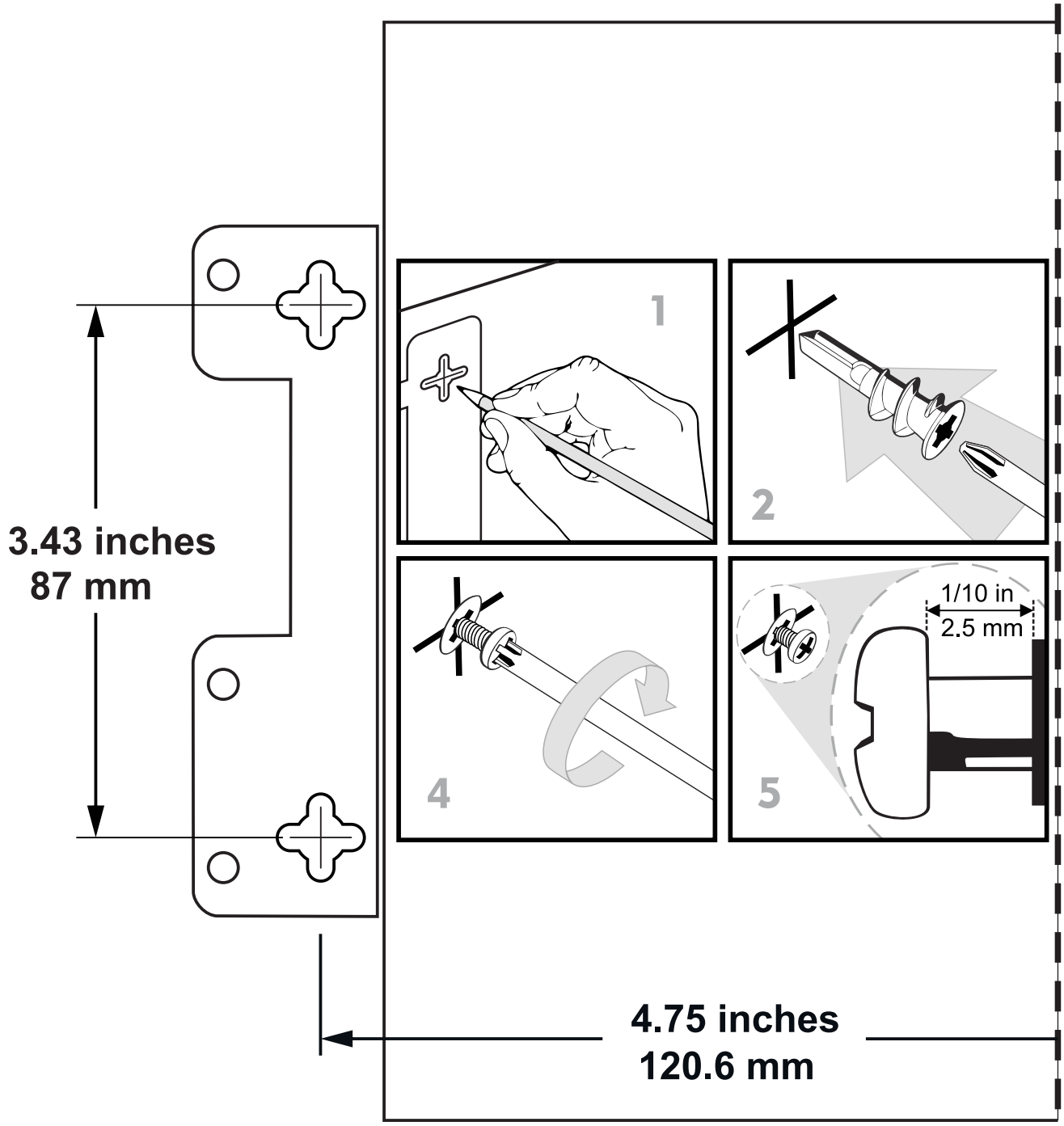

FRONT (i/o ports)

Align Cut Edge of Page B with Arrows on Page A and tape together

CUT ON DASHED LINE

REAR (power input)

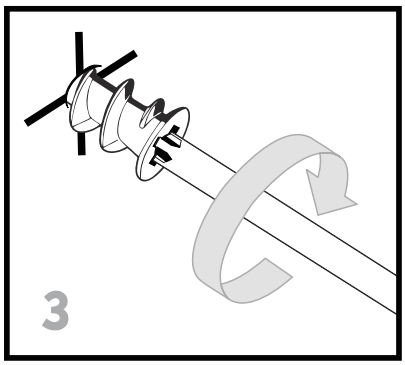

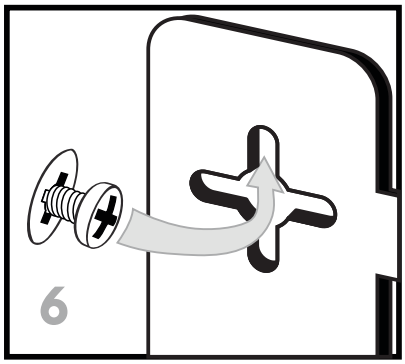

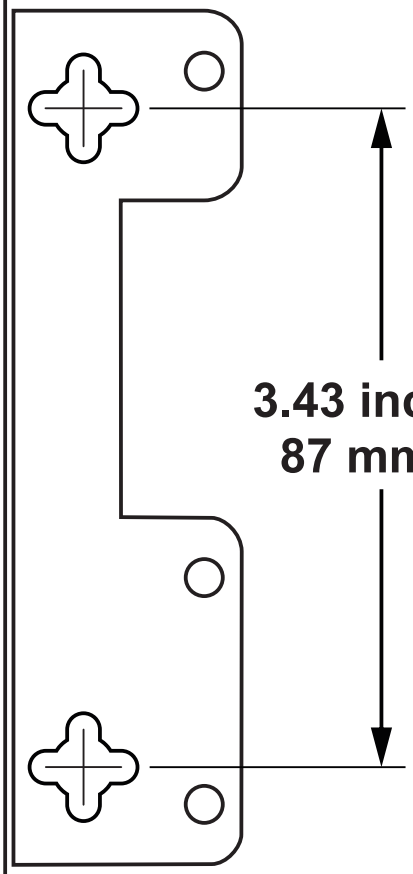

4.75 inches
120.6 mm

FRONT (i/o ports)

Page B